Available online at www.sciencedirect.com
SCIENCE DIRECT®
Sensors and Actuators A 112 (2004) 32–35
SENSORS AND ACTUATORS A PHYSICAL
www.elsevier.com/locate/sna

Non-contact current measurement with cobalt-coated microcantilevers

S.M. Goedeke*, S.W. Allison, P.G. Datskos

Oak Ridge National Laboratory, P.O. Box 2008, M.S. 6054, Oak Ridge, TN 37831, USA

Received 13 December 2002; received in revised form 1 December 2003; accepted 2 December 2003

Abstract

A magnetic field detection system that uses a cobalt-coated microcantilever as the detector element is demonstrated. Three different microcantilever geometries are investigated. This research also demonstrates a novel microcantilever readout technique using a dual fiber optical readout. The cantilever sensors are shown to detect changes in current as small as 0.1 A and the ability to measures current up to 5 mm from the sensor.
© 2003 Elsevier B.V. All rights reserved.

Keywords: MEMS; Current sensor; Fiber optic; Microcantilever; Cobalt

1. Introduction

Microcantilevers are key components of many micro-electro-mechanical systems (MEMS) because small changes to microcantilevers, either physically or chemically, can lead to changes in mechanical characteristics. Microcantilever research began with the development of the atomic force microscope (AFM), where a microcantilever is moved across a surface, and changes in the topography lead to deflections [1]. After development of the AFM, researchers began to the use these structures as the basis of sensors to measure a variety of stimuli from chemicals to photons [2–6]. In the present research, we have taken these structures and used them to perform a non-contact current measurement.

As with all other non-contact current detectors, the sensor has to be sensitive to small changes in the induced magnetic field. An expression for the induced magnetic field $B(I)$ around a long straight wire is:

$$B = \frac{\mu_0 I}{2\pi R}, \tag{1}$$

where μ_0 is the permeability of free space (H/m), I the current (A), and R is the radial distance from the center of the wire (m). Eq. (1) can easily be derived from Ampere's Law, for a path length equal to the circumference of a circle around the wire.

In order to acquire sensitivity, magnetic material must be added to the microcantilever so it will respond to small fluctuations in field. Other researchers have accomplished this by gluing magnetic particles to the surface increasing the material volume [7]. For the present research, a thin layer of cobalt is coated on the front and back surfaces of the cantilever by an ion sputtering system. Cobalt was selected because it is one of three elements that are ferromagnetic in its bulk state, and in previous testing it has been found to respond better than iron and permalloy [8].

Once a microcantilever is coated, a method to monitor its motion is needed. To detect the motion of the cantilever, we have developed a simple dual fiber probe. The dual fiber probe consists of two optical fibers placed side-by-side as close as possible to each another with one end open and the other end has optical connectors applied. The optical connectors are used to send light to the surface with the first connector, and retrieve the reflected light from the surface and channel it into an optical detector. This probe is not as sensitive to motion as some other readout techniques such as the reflective laser readout technique used in most AFM systems. But, it does have the advantage that it can be used with light emitting diodes (LED), which require fewer and simpler optics to condition the light source. Also, a cantilever may be fabricated in such a way that it can be attached to the end of a fiber to create a low profile self-contained unit. Minh et al. demonstrated a similar hybrid system that includes a single optical fiber with a microcantilever. The microcantilever is mounted on the end, such that the motion of the cantilever is in the direction per-

* Corresponding author. Tel.: +1-865-5766930; fax: +1-865-5760279.
E-mail address: goedekesm@ornl.gov (S.M. Goedeke).

0924-4247/$ – see front matter © 2003 Elsevier B.V. All rights reserved.
doi:10.1016/j.sna.2003.12.002

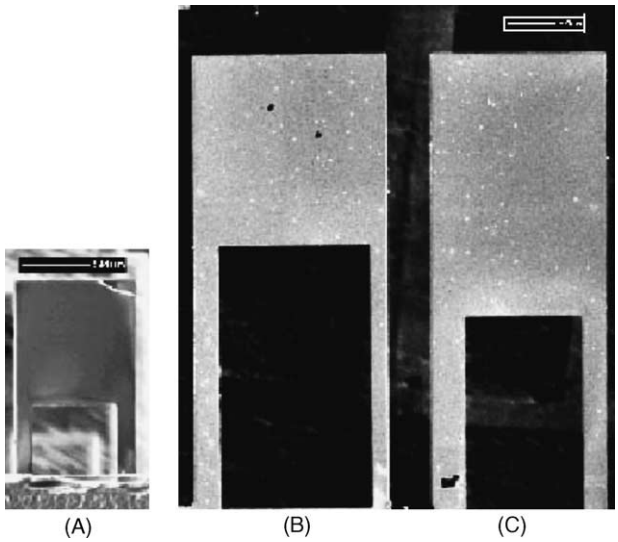

Fig. 1. Cantilevers fabricated for use with dual fiber readout.

pendicular to the fiber [9]. In our application, the cantilever and ideally the optical fiber need to be aligned with the direction of the wire. This arrangement places the cantilever so that it is perpendicular to the magnetic field, and maximizes the response. The dual-fiber-position detection system exhibits sensitivity on the order of 3 μm/mV for a blue diode laser coupled into a 200 μm fiber [10]. Increasing the amount of light delivered to the cantilever surface enhances the sensitivity. Alternatively, increasing the reflective area of the cantilever surface also aids in the sensitivity of the system.

In an effort to increase the reflective area of the cantilever, the two-legged "diving board" geometry shown in Fig. 1 is used. This geometry produces a structure with a large reflective area and a low stiffness. The lower stiffness improves the sensitivity of the microcantilever, since less force is required to make it deflect. To fabricate these structures, a silicon nitride substrate was chosen in one of two forms. The first form is a silicon nitride ledge structure that is found on the edge of a wafer of commercially available AFM cantilevers. The second form is produced by growing silicon nitride on a silicon substrate and through-etching the silicon to the silicon nitride surface thus producing a diaphragm. These substrates are then coated using an ion beam sputter coating technique. The substrate is rotated in the plume of displaced material so that both sides are coated evenly. This technique helps counter the thermal stress induced by the coating and allows thick coats to be applied without curling the substrate. The cantilevers are then patterned into the coated substrate using a focused ion milling technique [11]. The three cantilever geometries tested are shown in Fig. 1. The dimensions of these cantilevers are given in Table 1. These dimensions allow evaluation of the effect of geometry on the response of the system.

Table 1
Cantilever specifications

Cantilever	Overall		Leg		Coating thickness (nm)	Sensitivity (A/V)
	Length (μm)	Width (μm)	Length (μm)	Width (μm)		
A	145	50	50	20	150	327
B	470	270	270	20	200	0.625
C	470	200	200	30	200	23.9

2. Experimental

Characterization of the cantilever response was defined by two test series. For the first test series, the root-mean-squared (rms) current driven through the wire was varied from 0 to 1.6 A. The second series of tests evaluated the effect of the wire separation distance on the response of the cantilevers. In effect, these studies evaluated the effect of the two independent variables of Eq. (1). The experimental arrangement to perform these tests is shown in Fig. 2. Light from either a Power Technology Inc. model LDCU12/4864 405 nm diode laser or a Ledtronics model BP280CWB1k-3.6Vf050T 450 nm LED is launched into the delivery fiber of the dual fiber. The light then strikes the cantilever and is reflected into the capture fiber and sent into a Phillips model XP2020 photomultiplier tube (PMT). The signal from the PMT is then read using a Tektronix TDS 320 oscilloscope. The current is produced in the wire by generating a sine wave in the HP 3311A function generator that is then fed into the HP 6825A bipolar power supply and the oscilloscope. The power supply then produces an adjustable current in the wire, which is mounted on a translation stage.

For the first series of tests, the rms current in the wire was adjusted from 0.2 to 1.6 A in 0.1 A increments and the 405 nm diode laser was used as the light source. An example of a typical input pulse and the response from the PMT is shown in Fig. 3. A comparison of the amplitude of the response of the three cantilevers tested is shown in Fig. 4. The amplitude as a function of current was normalized by dividing the value at each point by the amplitude at 1.6 A for each curve. As can be seen the curves for cantilevers B and C have a linear shape that follows the magnetic field defined in Eq. (1). Cantilever A also has a region were the

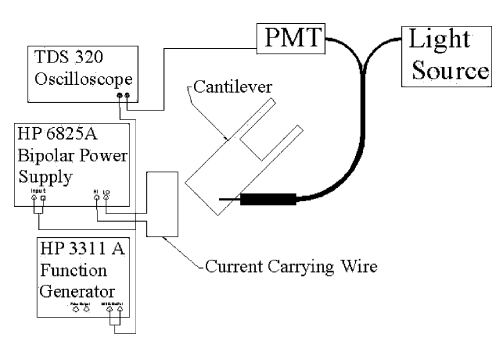

Fig. 2. Experimental setup.

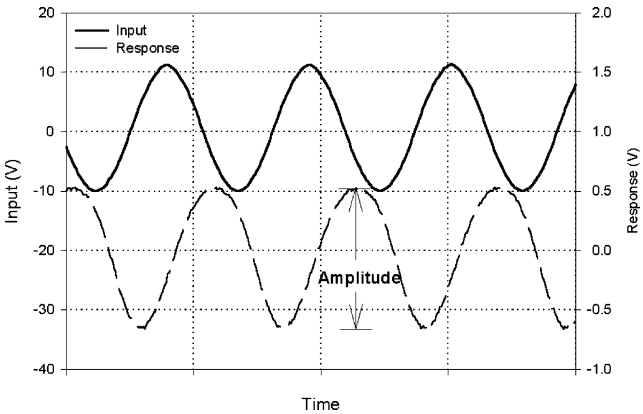

Fig. 3. Typical input signal and response.

response follows the magnetic field for currents above 1.1 A. It is likely that cantilever A does not follow the magnetic field below 1.1 A because of a combination of effects. First, cantilever A is much shorter than cantilevers B and C and therefore has a higher stiffness, making it less sensitive to change in the magnetic field. Second, the reflective area of cantilever A is considerably smaller than that of cantilevers B and C, meaning that much of the incoming light is not reflected to the capture fiber, and thus the sensitivity of the dual fiber is reduced. Cantilever A's divergence in response from the magnetic field is not the only noteworthy result of these tests. The curves for the three cantilevers have very different sensitivities, which have been obscured by the normalization. The three cantilevers have sensitivities that range from 0.625 to 327 A/V. As can be seen in Table 1, cantilever B, which has the longest legs and the widest head, has the greatest sensitivity. This makes sense, because the longer legs allow for a smaller stiffness, which means that less force is needed to deflect the cantilever. This also allows the cantilever to have greater deflections. The larger reflective area also allows for more incoming light to be intercepted from the delivery fiber and thus increase the response signal. The

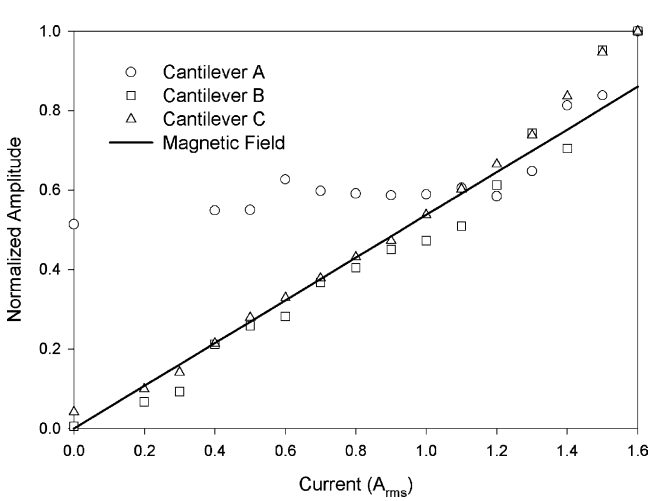

Fig. 4. Effect of variation in current on the response of cantilever sensor.

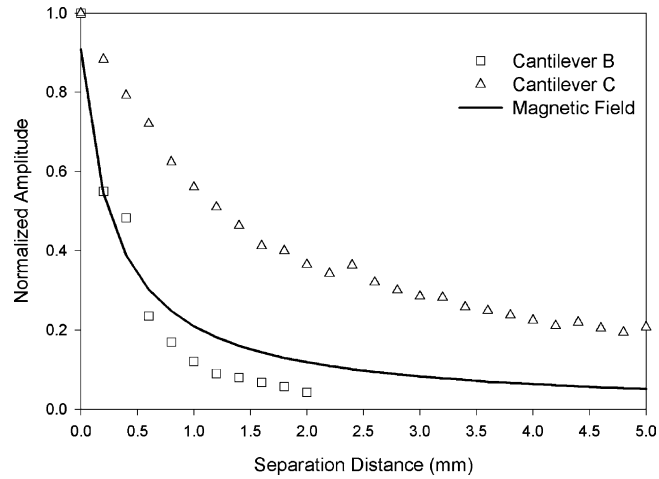

Fig. 5. Effect of wire separation distance.

larger reflective area also allows for more volume of the magnetic material to react to fluctuations in the magnetic field.

Next we evaluated the effect of wire separation distance on the response of the cantilevers. These tests were once again performed using the 405 nm diode laser and a current of 1.2 A. Dividing the value at each point by the amplitude when the wire was at the initial position for each curve normalized the amplitudes of the response. The three cantilevers had similar shaped responses, although they each have different maximum working distances as can be seen in Fig. 5. Cantilever B most closely followed the magnetic field out to 2 mm from the surface. Cantilever C showed the greatest ability to follow the magnetic field for the longest distance, and C was able to follow the field out to 5 mm from the surface. Cantilever A followed the magnetic field out to only 0.2 mm from the surface before the noise in the system overwhelmed the signal and is not shown in Fig. 5. This is not surprising, since the cantilever has a considerably smaller reflective area and the sensitivity was very low. It is interesting to note that the cantilever that responds to magnetic field at the greatest distance is not the most sensitive.

While the tests described above were performed with a diode laser light source, many of these tests could have been performed using a LED instead. To demonstrate this cantilever B was driven by a 1 A signal and was interrogated with both a LED and a diode laser light source. The response of Cantilever B had an amplitude of 1.2 V when interrogated with the diode laser. For the same parameters, the amplitude of the response of Cantilever B was 7.5 mV when interrogated with a LED. It can easily be seen that the increased light from the laser allows for higher response amplitude, and thus a better signal to noise ratio. It should also be noted that, although the signal with the LED is three orders of magnitude smaller it is still clearly discernable. It should be stated that, brighter LEDs are available, than the one used in this effort. Also, better fiber-to-LED coupling methods need to be explored.

3. Conclusions

This research gives preliminary results that illustrate the feasibility of a hybrid fiber-optic non-contact current sensor. The research evaluated both the micromechanical and the fiber-optic portion of the sensor. Two major conclusions could be reached for the micromechanical portion. First, the amplitude of the response was a function of the current for all of the cantilevers for at least part of the range of currents tested. Cantilevers B and C managed to follow the current for the entire range. Second, cantilevers B and C also followed the magnetic field as a function of wire separation distance. This means that the cantilevers are detecting changes in the magnetic field and could be made to function as a non-contact current sensor. This research also gave a good understanding of the interaction of the cantilevers with the dual-fiber probe. First, it was found that the diameter and numerical aperture of the fiber determine the reflective area of the cantilever. As these variables increase, more reflective area is needed to capture the incident light from the dual-fiber probe. The second result is more obvious, increasing the light delivered increases the signal to noise ratio. This can be easily accomplished by either using a brighter light source, such as a laser, or increasing the optical fiber diameter. Finally, the response of all but Cantilever A could be detected using an LED instead of the laser, thus potentially reducing the cost of the sensor. Our results not only demonstrate the feasibility of such a sensor, but also provide an empirical basis, and an obtainable benchmark for similar approaches.

Acknowledgements

Oak Ridge National Laboratory is operated for the US Department of Energy by Oak Ridge National Laboratory, managed by UT-Battelle, LLC, for the US Department of Energy under contract DE-AC05-00OR22725. The work performed by Oak Ridge National Laboratory was supported by the US Department of Energy and the Defense Advanced Research Projects Agency (DARPA). The work performed by the University of Tennessee was supported by the National Science Foundation grant ECS-9727208. The authors would also like to thank James Corbeil for the fabrication of the silicon nitride diaphragms used in the research, and Dr. W. Andrew Hollerman for his assistance in editing of this paper.

References

[1] G. Binning, C.F. Quate, Ch. Gerber, Atomic force microscope, Phys. Rev. Let. 56 (9) (1986) 930–933.
[2] T. Thundat, P.I. Oden, R.J. Warmack, Microcantilever sensors, Micro Therm. Eng. 1 (3) (1997) 185–199.
[3] N.V. Lavrik, C.A. Tipple, M.J. Sepaniak, P.G. Datskos, Enhanced chemi-mechanical transduction at nanostructured interfaces, Chem. Phys. Lett. 336 (5-6) (2001) 371–376.
[4] P.G. Datskos, S. Rajic, L.R. Senesac, I. Datakou, Fabrication of quantum well microcantilever photon detectors, Ultramicroscopy 86 (1-2) (2001) 191–206.
[5] S.M. Goedeke, S.W. Allison, M.R Cates, P.G. Datskos, Determination of surface temperature on micro scaled objects, in: Proceedings of the 48th International Instrumentation Symposium, San Diego, CA, 5–9 May 2002.
[6] P.G. Datskos, S. Rajic, I. Datskou, Detection of infrared photons using the electronic stress in metal-semiconductor cantilever interfaces, Ultramicroscopy 82 (1-4) (2000) 49–56.
[7] R.P. Cowburn, A.M. Moulin, M.E. Welland, High sensitivity measurement of magnetic fields using microcantilevers, Appl. Phys. Lett. 71 (15) (1997) 2202–2204.
[8] S.M. Goedeke, Design Considerations in the Development of Microcantilever Based Non Contact Current Sensor, Ph.D. Dissertation, Tennessee Technological University, 2002.
[9] P.N. Minh, T. Uno, H. Watanabe, S.S. Lee, Y. Haga, M. Esashi, Hybrid optical fiber-apertured cantilever near field probe, App. Phys. Lett. 79 (19) (2001) 3020–3022.
[10] S.M. Goedeke, S.W. Allison, R.H. Farahi, S. Rajic, P.G. Datskos, Dual fiber-optic microcantilever proximity sensor, vol. 4468, in: Proceedings of the International Society for Optical Engineering, San Diego, CA, 29 July–3 August 2001, pp. 161–170.
[11] L.R. Sensesac, R.H. Farahi, J.L. Corbeil, D.D. Earl, S. Rajic, P.G. Datskos, Fabrication of integrated diffractive mico-optics for MEMS applications, vol. 4451, in: Proceedings of the International Society for Optical Engineering, San Diego, CA, 29 July 29–3 August 2001, pp. 295–305.

Biographies

Shawn Goedeke received a PhD in mechanical engineering from Tennessee Technological University (2002) and has 3 years graduate research experience at Oak Ridge National Laboratory (ORNL). He is currently in his first year of post doctoral research at ORNL. He has collaborated on projects to: measure the emissions of over the road trucks; develop of high-temperature temperature sensitive paints; and measure temperature in jet engines. His research interests include microcantilever sensors, phosphor-based temperature sensors, and triboluminescent damage sensors.

Steve Allison received a PhD in engineering physics from the University of Virginia (1979) and has 24 years experience at Oak Ridge National Laboratory. He has participated with his close associates and collaborators in pioneering thermometry based on phosphor materials. This technique has seen use in internal fighter jet engines, heat pump efficiency studies, motor-surface measurements, aerodynamic model thermometry, and other applications. He has held visiting appointments at the University of Tennessee and University of Virginia. His interests include fiber sensor applications for aerospace and energy (fuel cell) applications, fluorescence-based sensor systems (thermometry), micro-optoelectrical-mechanical (MOEMS) systems and combining optics with nanotechnology. He has approximately 100 publications.

P.G. Datskos is a research staff member at Oak Ridge National Laboratory and a research professor at the University of Tennessee. His interests include micro-electro-mechanical systems (MEMS) and nano-electro-mechanical systems (NEMS). He was the recipient of R&D 100 Awards in 1996, 1998, 1999, and 2003 for the development of micro-mechanical temperature/chemical sensors using microcantilevers, the microcalorimetric spectrometer, and the uncooled MEMS photon detector. He has authored or co-authored over 100 publications and has an extensive body of work associated with physical and chemical MEMS sensor technology. He currently holds nine US patents on micromechanical sensors and has a number of patents pending.