ELSEVIER

Sensors and Actuators B 61 (1999) 75–82

SENSORS AND ACTUATORS B CHEMICAL

www.elsevier.nl/locate/sensorb

Detection of 2-mercaptoethanol using gold-coated micromachined cantilevers

Panos G. Datskos [a,b,*], Isidor Sauers [a]

[a] *Engineering Technology Division, Oak Ridge National Laboratory, Oak Ridge, TN 37831, USA*
[b] *Department of Physics and Astronomy, University of Tennessee, Knoxville, TN 37996-12000, USA*

Received 23 June 1999; received in revised form 25 June 1999; accepted 27 July 1999

Abstract

We have measured the response of gold-coated silicon nitride microcantilevers to 2-mercaptoethanol ($HS-CH_2-CH_2-OH$) vapors and found that they respond rather sensitively to 2-mercaptoethanol vapors. Such microcantilevers can be used to develop sensitive micromechanical chemical sensors for detecting sulfur-containing compounds. Microcantilevers with a gold coating on one side respond to adsorption of molecules by changes in their resonance frequency and/or bending. The bending induced from adsorption of 2-mercaptoethanol molecules on microcantilevers is at least an order of magnitude more sensitive than any corresponding resonance frequency changes resulting from mass loading. In the present studies, we used the adsorption-induced bending and placed a lower limit in the minimum detectable concentration of mercaptan vapor at <50 parts per billion (ppb). © 1999 Elsevier Science S.A. All rights reserved.

Keywords: Mercaptans; Microcantilever; Molecular adsorption; Resonance frequency; Bimaterial bending

1. Introduction

2-Mercaptoethanol ($HS-CH_2-CH_2-OH$) is a liquid at room temperature, has a vapor pressure of 1 Torr at 20°C, a boiling point of around 157°C, and possesses a strong unpleasant odor [1]. For the human nose, the odor threshold for mercaptans is between 0.7 and 35 parts per billion (ppb) [2]. Although the human nose is sensitive to mercaptans, it cannot serve as a long-term alternative to chemical detectors because of potential chemical fatigue. 2-Mercaptoethanol is used in a number of applications such as rust inhibitor in steel, brightening agent in copper deposition, tarnish remover from alloys and metals, ingredient in hair permanent chemicals and wool and hair dyes, mosquito control agent, a reagent for diagnostic bioassays, and an initiator in polymeric reactions [3]. About 40,000 workers in the USA are potentially exposed to 2-mercaptoethanol [4].

Because of the effects on biological systems, there is a need for the development of continuous direct reading monitors and personal samplers for 2-mercaptoethanol. Yet, to date, no effective sampling method has been identified. While various techniques have been used to collect and analyze airborne mercaptans, no information is available in the literature on sampling procedures specific to 2-mercaptoethanol. Sorbent tubes containing Chromosorb 104 and provide an efficient sampling method for most mercaptans although it has been found unsatisfactory for ethanethiol. Gas chromatographic techniques have been used to detect mercaptans in the ppb range [5]. In those studies, a hydrogen flame was used along with a column of 4% carbon 20 M terminated with terephthalic acid on 60–80-mesh hexamethyldisilazane (HMDS) pre-treated chromosorb W. The H_2 flame detector temperature was 200°C and a retention time of 3.65 min was reported for 2-mercaptoethanol [5].

In the present studies, we investigated the interaction of 2-mercaptoethanol with gold-coated microcantilevers such as those commonly used in scanning force microscopy

* Corresponding author. Engineering Technology Division, Oak Ridge National Laboratory, MS 8039, P.O. Box 2009, Oak Ridge, TN 37831-8039, USA. Tel.: +1-432-574-6205; fax: +1-423-574-9704; E-mail: pgd@ornl.gov

0925-4005/99/$ - see front matter © 1999 Elsevier Science S.A. All rights reserved.
PII: S0925-4005(99)00251-8

(SFM). We found that such microcantilevers can be used to detect the presence of mercaptans. Gold interacts with sulfur-containing compounds by forming self-assembled monolayers. In fact, highly ordered monolayers are formed when organomercaptans are adsorbed on gold a surface either from the vapor phase [6] or solution [7]. It is this interaction that provides the specificity of gold-coated microcantilevers to sulfur-containing compounds. The resonance frequency of the microcantilever was found to change when molecules were adsorbed on its surface [8–10]. One advantage of a microcantilever sensor is that its active area is small (typically $\sim 10^{-6}$ cm^2) which is obviously advantageous when miniaturization is desired. Since silicon microcantilevers can be easily micromachined, mass production and array fabrication is possible.

When molecular adsorption is preferentially confined to only one side of the microcantilever, then in addition to the resonance frequency variation microcantilevers also undergo bending. The microcantilever bending results from unbalanced adsorption-induced differential surface stress (see Fig. 1). This adsorption-induced effect provides an alternate and more sensitive method for measuring the response of micromachined cantilevers to chemicals in their environment. In Fig. 2, we show a micrograph of a commercially available triangular SiN_x microcantilever [11].

In this paper, we report on the sensitivity of adsorption-induced bending of a gold-coated microcantilever and compared that sensitivity to the sensitivity derived from frequency variation due to mass loading.

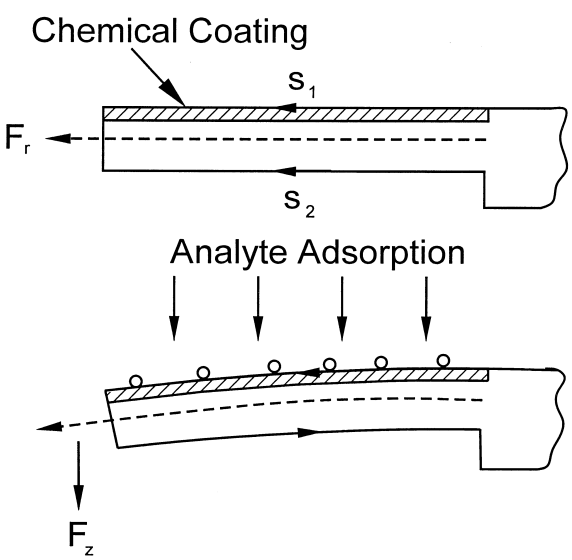

Fig. 1. Schematic diagram showing the bending response of the microcantilever. Surface stresses s_1 and s_2 are balanced at equilibrium but become unequal and cause bending upon adsorption of analyte molecules. A force along the z-direction is induced due to the differential surface stress which causes the microcantilever to change its radius of curvature.

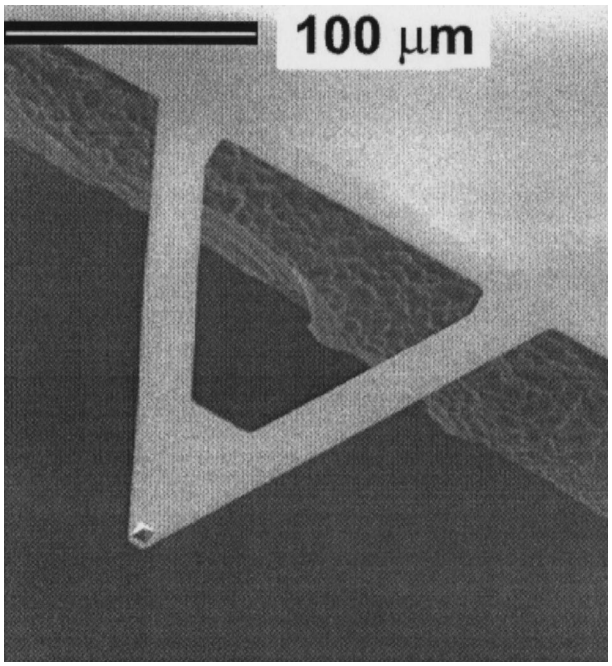

Fig. 2. Micrograph showing a triangular SiN_x microcantilever. The pad at the apex of the microcantilever was used to reflect the readout laser beam.

Using the microcantilever bending as the sensing mechanism, a detection sensitivity of 65 ppb was estimated for 2-mercaptoethanol.

2. Molecular adsorption on microcantilevers

2.1. Microcantilever resonance frequency

Currently available gravimetric chemical sensors [12,13] such as quartz crystal microbalances (QCM) [14,15], surface acoustic wave (SAW) [16–20], acoustic plate mode (APM) devices [15,20], chemiresistors [13], and flexural plate wave oscillators (FPW) [16,17,20,21] achieve sensing by monitoring the sorption processes on the sensing element that result in some frequency shift. However, chemical detection based on the change in resonance frequency of a microcantilever is not as sensitive as the use of deflection change. Nonetheless, it can provide valuable information when increased molecular adsorption takes place. When the interaction of an analyte with the microcantilever results in the adsorption of that species on the microcantilever surface, it causes changes in the deflection (or radius of curvature) and the resonant frequency, f_0, of the microcantilever. For a rectangular microcantilever bar with a spring constant, k, the resonance frequency, f_0, is inversely proportional to the square root of the effective mass m_{eff} of the microcantilever [$f_0 = (1/2\pi)(k/m_{\mathrm{eff}})^{1/2}$]. The effective mass can be related to the mass

of the microcantilever beam, m_b, through the relation: $m_{eff} = nm_b$, where n is a geometrical factor [22,23]. For example, in the case of commercially available [11,24] silicon nitride (SiN_x), microcantilevers with spring constants of 0.06 and 0.03 N/m, the values of n are 0.14 and 0.18, respectively [23]. In order to determine the change in resonance frequency, $\Delta f(m_{eff}, k)$, both the change in spring constant, Δk, and mass Δm_{eff} must be obtained; a change of $\Delta k/k \approx 10^{-6}$ was reported for gelatin-coated microcantilevers [10].

For a rectangular microcantilever of length l, thickness t and width w, the spring constant can be written as [22]:

$$k = \frac{Ewt^3}{4l^3} \tag{1}$$

where E is the Young's modulus. When there is a uniform mass load (either from vapors or solution) distributed over the surface, the resonance frequency decreases with increasing mass and can be described by [22]:

$$\frac{df}{dm} = \frac{1}{4\pi n_1 l^3 w}\sqrt{\frac{E}{\rho^3}} \tag{2}$$

where $\rho\ [= m/(lwt)]$ is the mass density of the microcantilever and the deposited mass and n_1 is a geometrical factor approximately equal to unity. For a typical SiN_x microcantilever (with $E = 3.85 \times 10^{12}$ dyn/cm^2, $l = 200$ μm, $w = 20$ μm, $t = 0.6$ μm, $\rho = 3.1$ g/cm^3, and $n_1 = 0.98$) the expected rate of frequency change will be $df/dm = 1.82 \times 10^{12}$ Hz/g. Thus, a shift in the resonance frequency will be observed as additional mass is deposited on the microcantilever. Using shorter and narrower microcantilevers can lead to a more sensitive response.

In order to compare the microcantilever to other gravimetric devices we will use the mass sensitivity S^m defined as [16,17,20]:

$$S^m = \frac{1}{f}\frac{\Delta f}{\Delta m_s^{min}} \tag{3}$$

where Δm_s^{min} is the minimum detectable surface mass density and is equal to the minimum detectable mass over the active area of the microcantilever. Then, substituting for the mass $m = \rho(lwt)$ where ρ is the mass density of the deposited material we get:

$$S^m = \frac{1}{\rho f}\frac{\Delta f}{\Delta t}. \tag{4}$$

The mass sensitivity for the microcantilever is $S^m \approx 1/(\rho t)$ when the microcantilever is uniformly mass loaded. Ward [19] has reported a tabulation of operating frequencies along with surface mass sensitivities of several kinds of gravimetric based chemical sensors. In Table 1, we show a comparison between the microcantilever (when only shifts in resonance frequency are used as the sensing mechanism) and other gravimetric devices. Changes of $\Delta f/f = 10^{-7}$ have been measured earlier for QCM and SAW devices [20]. Assuming that a more modest $\Delta f/f = 10^{-6}$ can be measured, the microcantilever is expected to be more sensitive than other gravimetric devices with a $\Delta m_s^{min} \sim 69$ pg/cm^2. Such small values of Δm_s^{min} correspond to a total adsorbed mass $\Delta m \sim 2.8 \times 10^{-15}$ g and if we assume an average molecular weight of 100 as few as $\sim 4 \times 10^{11}$ molecules can be detected. Even smaller Δm_a can be detected when the change in the microcantilever bending is used as the detection mode; in this case, a minimum detectable mass of $< 10^{-16}$ g is possible which corresponds to a surface mass sensitivity of over one order of magnitude better.

2.2. Microcantilever bending

The bending of a microcantilever is extremely sensitive to the adsorption of chemical analytes on its surface and our results show that monitoring of the bending as analytes adsorb on the microcantilever surface can provide the highest chemical sensitivity. The minimum detectable mass can be two orders of magnitude smaller when the microcantilever bending is used as the chemical sensing mechanism instead of the resonance frequency change. As microcantilevers are stressed (for example, due to adsorption of

Table 1
Comparison between the microcantilever and other commonly used gravimetric-based sensor devices

Gravimetric sensor	Resonance frequency (MHz)	Thickness (μm)	S^m (cm^2/g)	Δm_s^{min} (ng/cm^2)
Microcantilever	0.005–5	0.1–4.5	14.560–72.8	0.069–13.8
FPW[a]	2–7	3.5	951	0.4
SAW[b]	30–300	760	151	1.2
APM[c]	25–200	200	65	1.0
QCM[d]	5	500	14	10

[a]FPW from Refs. [15,20,21].
[b]SAW from Refs. [19,20].
[a]APM from Refs. [19,20].
[d]QCM from Ref. [20].

a chemical analyte), a change in the radius of curvature (see Fig. 1) occurs which is given by [25–27]:

$$\frac{1}{R} = \frac{6(1-\upsilon)}{Et^2}\Delta s \tag{5}$$

where R is the radius of curvature of the microcantilever, υ is the Poisson's ratio and Δs $(=\Delta s_1 - \Delta s_2)$ is the differential surface stress. When the total adsorbed mass is small compared with the total mass of the microcantilever, we can assume that the differential surface stress Δs is proportional (at least to a first order approximation) to the number of adsorbed molecules and therefore to the total additional mass Δm, i.e.,

$$\Delta s = C_1 \Delta m \tag{6}$$

where C_1 is a proportionality constant that depends on the sticking coefficient of the adsorbed molecules; a typical value for C_1 is $\sim 10^{15}$ dyn cm^{-1} g^{-1}. The bending z_{max} $[=l^2/(2R)]$, is related to the additional mass (and surface differential stress) through

$$z_{max} = C_1 \frac{3l^2(1-\upsilon)}{Et^2}\Delta m \tag{7}$$

Therefore, measurement of the bending z_{max} allows the amount of adsorbed mass can be determined when the adsorption process is confined to only one side of the microcantilever.

Molecular adsorption can also induce changes in the spring constant, k, of the microcantilever which can be described as [23]:

$$\Delta k = \frac{\pi^2 n}{4n_0}(\Delta s_1 + \Delta s_2) = C_1 \frac{\pi^2 n}{4n_0}\Delta m \tag{8}$$

where the geometrical factor $n = 0.24$ for a rectangular microcantilever and n_0 is another geometrical factor. Standard physical parameters for commercially available microcantilevers can be found in the literature [11,24]. Studies have shown [10] that a value of 0.38 N/m can be obtained for surface differential stress, Δs, as a result of exposure of a gold-coated microcantilever to chemical analytes. Thus, the magnitude of exposure can be related to the extent of the bending which, in turn, can be used as a sensitive method for chemical detection.

3. Experimental

The experimental set-up used in the present studies is shown schematically in Fig. 3. We used commercially available [11], ''V''-shaped SiN_x microcantilevers with length of 200 μm and spring constant 0.6 N/m. Each was 0.6-μm thick and had a 50-nm thick gold/chromium film uniformly covering one of their sides. The bending of microcantilevers can be readily determined by a number of means, including optical, capacitive, electron tunneling, piezoresistive, and piezoelectric methods. In this work, we used an optical readout technique for observing microcantilever bending. A diode laser (delivering 1 mW at 670 nm) was used in a probe configuration to monitor the microcantilever bending. The diode laser was focused down to a 400 μm^2 spot on the tip of the microcantilever using a 20× microscope objective; the tip of the ''V''-shaped SiN_x microcantilever had an area of around 20 μm^2 (see Fig. 2). In order to minimize heating of the tip by the probe laser, optical power was reduced by placing a neutral density filter with an optical density of 1.0 between the probe laser and the objective. A quad-element (A,B,C,D) photodiode detector was used to collect the reflected probe beam. The current output ($i_{A,B,C,D}$) of the photodiode depended linearly on the bending of the micro-

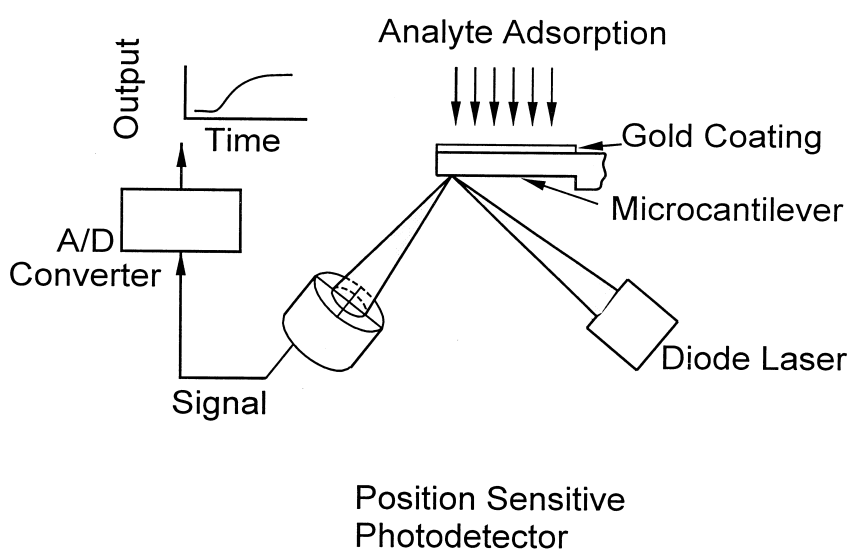

Fig. 3. Schematic of the experimental arrangement used to determine the adsorption-induced bending of microcantilevers exposed to analytes. In this arrangement, the diode laser (with $\lambda = 670$ nm) is used to measure the deflection of the microcantilever.

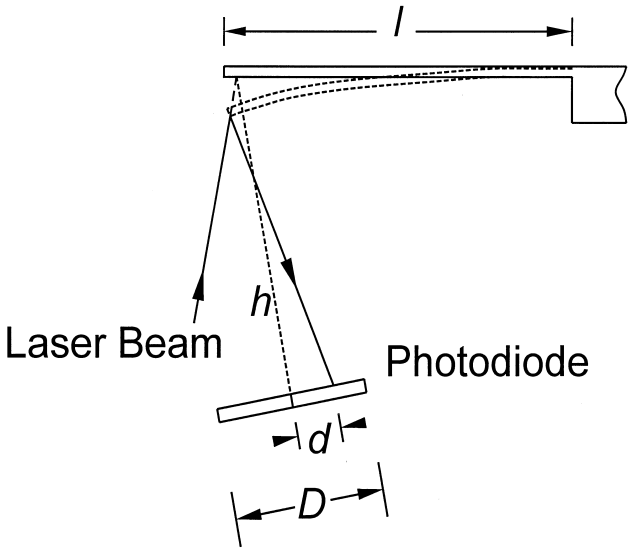

Fig. 4. Geometry of the microcantilever bending.

cantilever. A high narrow bandpass optical filter was placed in front of the photodiode allowing the laser beam to be detected while preventing other wavelengths from reaching the photodiode. The amplified differential current signal from the quad cell photodiode, $i_{A,B,C,D}$ $[=(i_A+i_B)-(i_C+i_D)/(i_A+i_B+i_C+i_D)]$, was monitored and recorded using a 16-bit analog-to-digital (A/D) converter and sent to a lock-in amplifier (SR850, Stanford Research Systems) for signal extraction and averaging. Dosing was accomplished by allowing the vapor pressure from small amount of liquid thiol kept at room temperature to expand throughout the enclosed volume. Monitoring of the thiol concentration was performed using a Gas Chromatography-Mass Spectroscopy (GC-MS). A 16-bit A/D converter with a resolution of 0.33 mV was used to monitor the microcantilever deflection signal and the sampling of the deflection signal was performed at a rate of 4 Hz.

From the measured photodiode signal $i_{A,B,C,D}$, the microcantilever deflection, z_{max}, can be obtained from (see Fig. 4):

$$z_{max} = \frac{d}{h} l \tag{9}$$

where h is the distance between the microcantilever and the photodiode, d is the distance the reflected beam moved across the photodiode. Taking into account that $d = D/2 i_{A,B,C,D}$ where D is the diameter of the photodiode, the microcantilever deflection z_{max} is given by:

$$z_{max} = \frac{1}{2} \frac{(i_A+i_B)-(i_C+i_D)}{i_A+i_B+i_C+i_D} \frac{D}{h} l. \tag{10}$$

Furthermore, from the measured $i_{A,B,C,D}$, the bending sensitivity (nm/A) can be determined by calibrating the microcantilever deflection by lowering the microcantilever to a rigid substrate which is then raised and lowered repeatedly while the microcantilever oscillated between contact and non-contact position with the surface. By correlating the deflection of the substrate with the linear laser deflection signal on the photodiode, a measure of the deflection as well as the deflection sensitivity was obtained [28]. This was repeated for each microcantilever prior to exposure so that any ''memory'' effects can be eliminated. The microcantilevers were mounted in a chip holder and the entire assembly was placed inside a sealed chamber (with a total volume ~ 50 cm^3). In the present studies, we

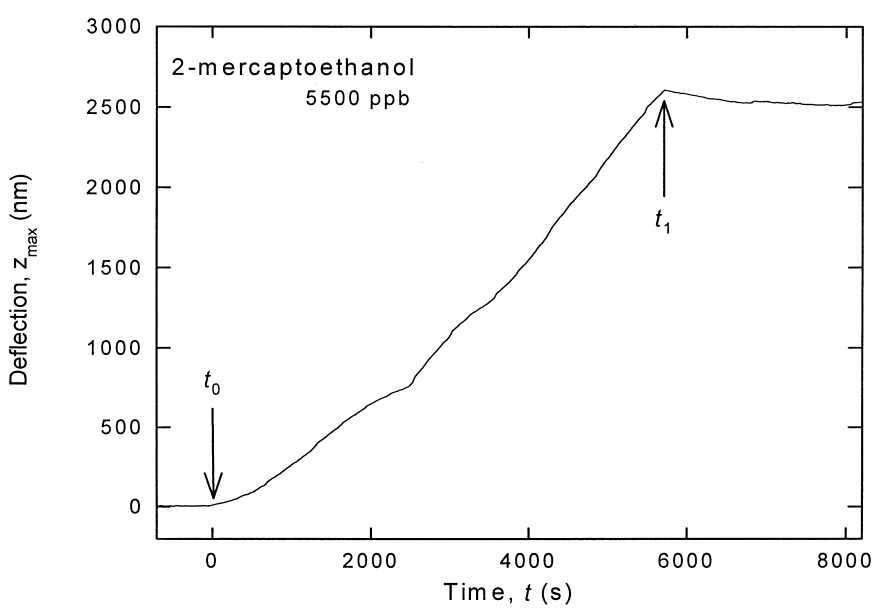

Fig. 5. Microcantilever bending as a function of exposure time to 2-mercaptoethanol vapors corresponding to 4.2 mTorr of 2-mercaptoethanol in 760 Torr of ambient air. The time $t = t_1$ corresponds to the time the chamber was flushed with N_2.

did not regenerate microcantilever that were exposed to 2-mercaptoethanol vapor. For this reason, for each dosing we used a new microcantilever.

We observed that microcantilevers mounted on the chip holder exhibited an initial drift following the activation of probe diode laser, partially due to heating from the laser light. The extent of the drift and the time required to attain equilibrium (steady state) depended on a number of factors, including the presence of other chemical vapors (such as humidity). Consequently, all the results exposed were obtained after a steady state was reached.

4. Results and discussion

The study of molecular adsorption to gold-coated microcantilevers was accomplished by monitoring the deflection of microcantilevers exposed to 2-mercaptoethanol vapor. Since microcantilever deflection, z_{max} is proportional to the adsorption-induced surface stress which, in turn, is proportional to the number of adsorbed molecules, the monitoring of deflection as a function of time allows the determination of the molecular adsorption rate.

In Fig. 5, we plotted the time evolution of the bending of a gold-coated SiN_x microcantilever exposed to a mixture of 4.2 mTorr of 2-mercaptoethanol in 760 Torr of ambient air. This rather high concentration of 2-mercaptoethanol correspond to 5.5 parts per million (ppm). The time $t_0 = 0$ corresponds to the time when 2-mercaptoethanol was allowed into the chamber. The microcantilever exhibited a bending of ~ 2606 nm after an exposure time of $t_1 \approx 5744$ s. At $t = t_1$ the chamber containing the microcantilever was flushed with N_2 and no further bending was observed after equilibrium was reached. As seen in this figure, the deflection rate stops as the 2-mercaptoethanol is removed from the sampling volume. The data presented in this figure demonstrate both the high sensitivity and large dynamic range of gold-coated microcantilevers to 2-mercaptoethanol vapor.

In Fig. 6, we plotted the time evolution of the microcantilever deflection when exposed to varying amounts of 2-mercaptoethanol ranging from 65 to 350 ppb. The time $t = 0$ corresponds to the time when 2-mercaptoethanol was introduced into the chamber. It can be seen that after the introduction of the 2-mercaptoethanol into the chamber, a rapid (and appreciable) response of the microcantilever was observed. After final equilibrium was reached, the deflection reached a maximum value that remained constant for each concentration. The mixture in the chamber was sampled and introduced into a Finnigan Mat GCQ gas chromatograph/mass analyzer to determine the amount of 2-mercaptoethanol introduced into the exposure chamber. In Fig. 7 is plotted the final deflection of the microcantilever as a function of the concentration of 2-mercaptoethanol for each exposure. The measured deflection of the microcantilever exhibits a linear dependence on the concentration of 2-mercaptoethanol and a slope of 0.432 nm/ppb was determined; concentrations as small as 65 ppb can easily be detected using a microcantilever sensor. It can be seen that the microcantilever responds very sensitively to the presence of minute amounts of 2-mercaptoethanol as these molecules adsorb on the gold-coated surface forming self-assembled monolayers.

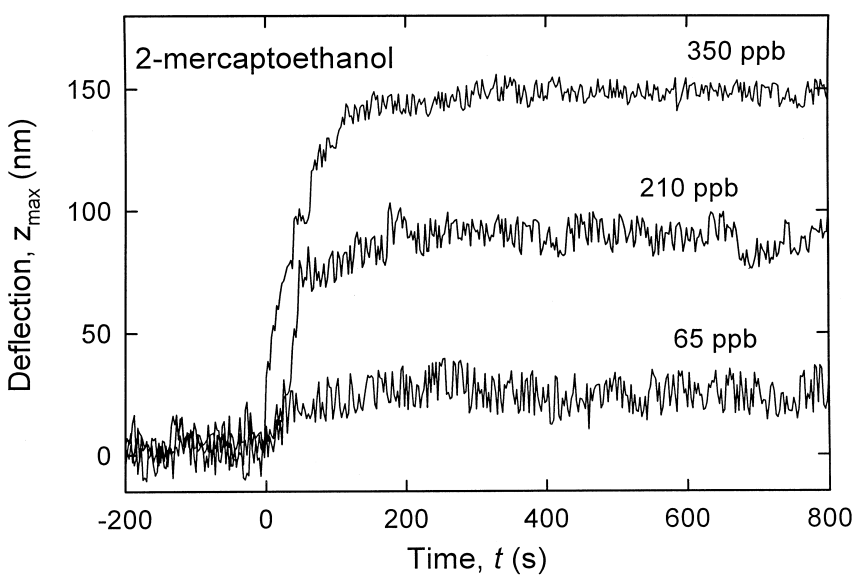

Fig. 6. Microcantilever bending as a function of exposure time to 2-mercaptoethanol vapors corresponding to 65, 210, and 350 ppb; the time $t = 0$ corresponds to the time 2-mercaptoethanol was introduced into the detection system.

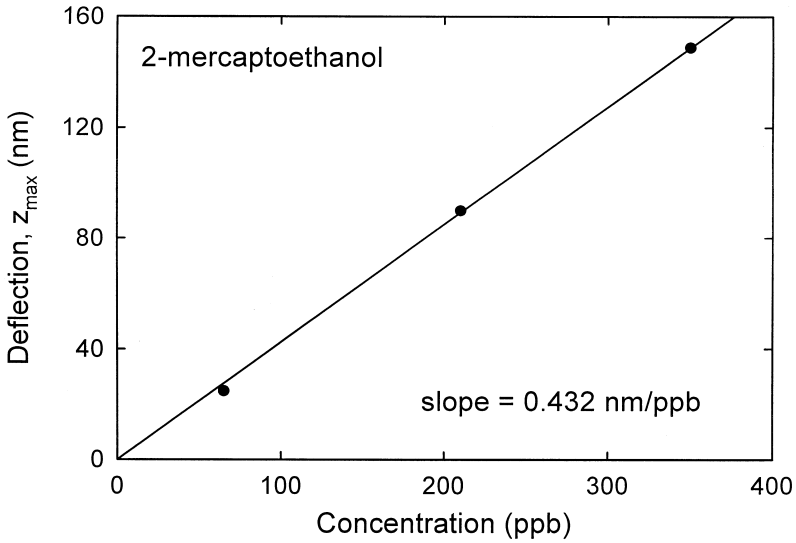

Fig. 7. Final bending of the microcantilever as a function of 2-mercaptoethanol concentration (ppb).

With our experimental set-up, we noticed that there was a time-dependent drift present in the deflection signal and the drift in the measured deflection signal depended linearly on time. This deflection drift was recorded as a function of time prior to the exposure of the microcantilever to 2-mercaptoethanol vapors and was determined by linear least squares fit. The data presented in Figs. 5 and 6 have been corrected for any drift. We also noticed that the rate of microcantilever bending is a strong function of the concentration of 2-mercaptoethanol in the chamber (Fig. 6). Again, as before, the baseline shift from the thermal drift is subtracted from the result.

The noise contribution in the detection system originates mainly from drift in the microcantilever bending due to laser heating. Since the microcantilever is bimetallic, the laser light used for optical detection can heat the cantilever causing bending. In general, this drift reaches an equilibrium within an hour of experiment. We found that most of this drift can be minimized by annealing the microcantilever to a temperature of 350°C which relieves any residual stresses present in the material. Annealing at higher temperature causes the permanent bending and deformation of the microcantilever which can be attributed to changes in the grain structure of the cantilever and gold film. Yet, another source of noise comes from the oscillation of the microcantilever due to ambient temperature. However, this kind of drift will be represented by an AC component superimposed on our DC deflection signal. Most drifts observed could also be eliminated (or at least reduced) by using a pre-calibrated reference microcantilever.

The important factor in this measurement was that the drift value was a linear function of time before the 2-mercaptoethanol vapor was introduced into the confinement volume. The deflection drift prior to 2-mercaptoethanol introduction was determined by fitting it to a linear function with a slope of 5.1×10^{-2} nm/s with a confidence coefficient of 0.9999. Additionally, it was necessary to make sure that the deflection drift was constant throughout the experiment. We verified this by determining the signal drift after the experiment was completed and the 2-mercaptoethanol vapor had been removed from the confinement volume. In this time region, the deflection slope was determined to be 5.3×10^{-2} nm/s with a confidence coefficient of 0.9999. Comparing the difference in values before and afterwards, with the deflection values obtained during the dosing time, we reach the conclusion that it is of minimal influence. For display purposes, the average deflection slope is subtracted from the dosing data shown in Figs. 5 and 6. Without any further improvements, a minimum deflection signal of ~ 10 nm can be measured in our experimental set-up. Using the sensitivity slope of 0.432 nm/ppb, a detection limit of 23 ppb can be achieved. However, microcantilever deflections of over one order of magnitude smaller are routinely measured in SFM applications. It may then be possible to further lower the detection limit reaching parts per trillion (ppt).

Although, in our present studies, we have used an optical detection system, the deflection of a microcantilever can be measured with sub-Angstrom resolution using capacitive, piezoresistive, or piezoelectric detection methods. These detection systems have some advantage over optical detection system such as the elimination of optical set-up and alignment, and compactness.

5. Conclusion

In this paper, we have demonstrated that gold-coated microcantilevers respond sensitively to the presence of

2-mercaptoethanol. Earlier studies have demonstrated that the mass sensitivities of the frequency variation of microcantilevers can compete with those of other gravimetric chemical sensors. By monitoring, the bending of microcantilevers can provide an attractive way to detect 2-mercaptoethanol vapor. We have measured the bending of gold-coated microcantilevers exposed to very small concentrations; a value of $z_{max} \sim 24.8$ nm for 65 ppb was measured. However, we believe that this limit can be extended to parts per trillion. As with all gravimetric-based detection approaches, selectivity becomes a concern. Through the use of a number of differentially coated microcantilevers, a somewhat unique signature can be obtained based on pattern recognition techniques. Although in this work, we used only the changes in the microcantilever bending as the sensing (or static sensing) mechanism, the static microcantilever detection mode is at least two orders of magnitude more sensitive than the dynamic cantilever sensing. However, we should point out that in the microcantilever AC mode, lower resonance frequencies (of the order of kHz) than other gravimetric chemical devices are required. This means that not only the readout electronics can be simpler but by using higher harmonics (and therefore higher frequencies), the AC sensitivity can be further improved.

Acknowledgements

We would like to thank Drs. Thundat and Oden for helpful advise. Research sponsored by the EMSP program of the U.S. Department of Energy under contract DE-AC05-96OR22464 with Lockheed Martin Energy Research.

References

[1] F.F. Woodward, Monothioethylene glycol and thiodiglycol, J. Chem. Soc. (1948) 1892.
[2] K. Verschueren, Handbook of Environmental Data on Organic Chemicals, Van Nostrand-Reindhold, New York, 1977.
[3] G.G. Hawley, The Condensed Chemical Dictionary, Van Nostrand-Reindhold, New York, 1977.
[4] N.M. Bernholc, O. White, Jr., R.S. Baloyi, B.D. Silverstein, Toxic Material Advisory Report 2-Mercaptoethanol, Report No. BNL 51669, 1983.
[5] L. Fishbein, W.L. Zielinski Jr., Gas chromatography for hydroxyethyl derivatives, J. Chromatography 28 (1967) 418.
[6] R.G. Nuzzo, D.L. Allara, Adsorption of bifunctional organic disulfides on gold surfaces, J. Am. Chem. Soc. 105 (1983) 4481.
[7] R.C. Thomas, L. Sun, R.M. Crooks, A. Ricco, Real-time analysis of chemical reactions occurring at a surface-confined organic monolayer, J. Am. Chem. Soc. 7 (1991) 620.
[8] T. Thundat, G.Y. Chen, R.J. Warmack, D.P. Allison, E.A. Wachter, Vapor detection using resonating microcantilevers, Anal. Chem. 67 (1995) 519.
[9] T. Thundat, E.A. Wachter, S.L. Sharp, R.J. Warmack, Detection of mercury using resonating microcantilevers, Appl. Phys. Lett. 66 (1995) 695.
[10] E.A. Wachter, T. Thundat, Micromechanical sensors for chemical and physical sensing, Rev. Sci. Instrum. 66 (1995) 3662.
[11] Available from Park Scientific, Sunnyvale, CA.
[12] J. Janata, Principles of Chemical Sensors, Plenum, New York, 1989.
[13] J. Janata, M. Josowicz, D.M. Devaney, Chemical sensors, Anal. Chem. 66 (1994) R207.
[14] M.T. Gomes, A.C. Duarte, J. Oliveira, Detection of CO_2 using a quartz crystal microbalance, Sensors and Actuators B 26 (1995) .
[15] D.M. Ullevig, J. Evans, Effects of stressed materials on the radial sensitivity function of a quartz crystal microbalance, Anal. Chem. 54 (1982) 2341.
[16] J.W. Grate, S.J. Martin, R.M. White, Acoustic wave microsensors Part I, Anal. Chem. 65 (1993) 940A.
[17] J.W. Grate, S.J. Martin, R.M. White, Acoustic-wave microsensors Part II, Anal. Chem. 65 (1993) A987.
[18] H. Wohltjen, Mechanism of operation and design considerations for surface acoustic wave device vapour sensors, Sensors and Actuators 5 (1984) 307.
[19] M.D. Ward, Probing electrocrystallization of charge transfer salts with the quartz crystal microbalance, J. Electroanal. Chem. 273 (1989) 79.
[20] M.D. Ward, D.A. Buttry, In situ interfacial mass detection with piezoelectric transducers, Science 249 (1990) 1000.
[21] I. Koga, Radio-frequency vibrations of rectangular AT-cut quartz plates, J. Appl. Phys. 34 (1963) 2357.
[22] D. Sarid, Scanning Force Microscopy with Applications to Electric, Magnetic, and Atomic Forces, Oxford Univ. Press, New York, 1991.
[23] G.Y. Chen, T. Thundat, E.A. Wachter, R.J. Warmack, Adsorption-induced surface stress and its effects on resonance frequency of microcantilevers, J. Appl. Phys. 77 (1995) 3618.
[24] Digital Instruments, Santa Barbara, CA.
[25] F.J. von Preissig, Applicability of the classical curvature–stress relation for thin films on plate substrates, J. Appl. Phys. 66 (1989) 4262.
[26] S. Tomishenko, Theory of Plates and Shells, McGraw-Hill, 1940.
[27] G.G. Stoney, The tension of metallic films deposited by electrolysis, Proc. R. Soc. London A 82 (1909) 172.
[28] Note: If the deformation of the AFM cantilever tip/substrate junction is small compared to the deflection of the substrate, then a linear deflection is obtained for the contact region of the microcantilever deflection as a function of distance trace. This linear response was observed for all calibration data used in our experiments.